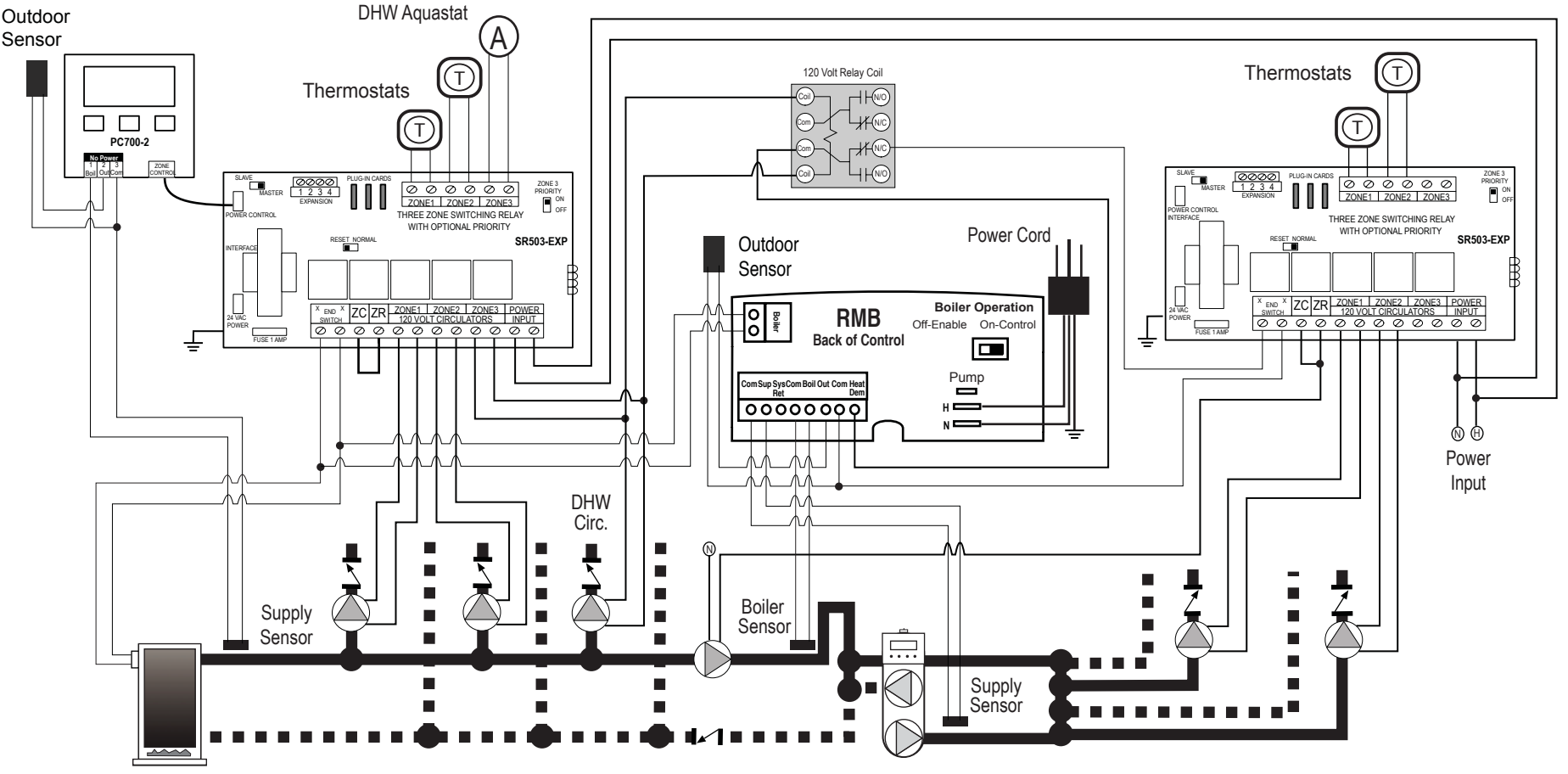

RMB - Radiant Mixing Block, Multiple Temperature System with DHW Priority and Boiler Reset

(Heat demand to RMB is removed during DHW Priority call.)